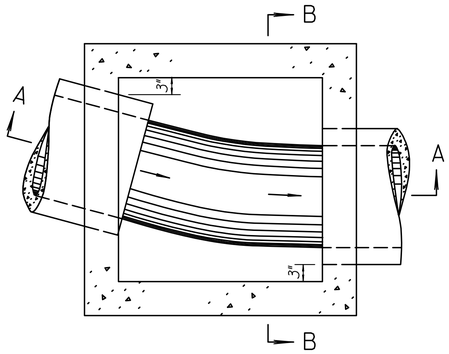

PLAN - FLOOR (Example I)

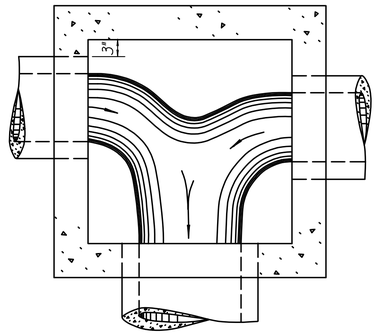

PLAN - FLOOR (Example III)

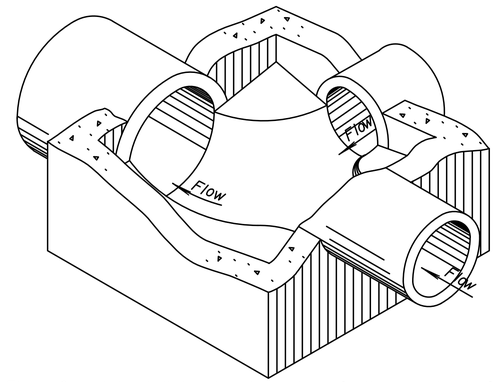

Floor of manhole shall be shaped as shown in the examples to increase hydraulic efficiency.

ISOMETRIC VIEW (Example IV)

Note: Use Class I Concrete throughout. All exposed edges shall be finished with an edging tool.

At the contractors option Class I Concrete (AE) or mix used in concrete pavement may be used throughout.

In general, pipes will enter and leave manhole at various positions. Where possible bend bars around pipes.

Floor of manhole shall be shaped as shown in various "EXAMPLES" with unreinforced Class I Concrete.

Manhole opening and steps, where used, shall be placed to afford easy access to top of shaped invert. Top reinforcing bars shall be adjusted accordingly.

All castings shall be gray iron.

The top of the manhole shall be sloped slightly to approximately fit the ground line or other condition as directed by the Construction Manager.

Dimensions and weights of cast iron as shown on this sheet are minimum. Larger dimensions and/or heavier weights of cast iron may be used.

The Contractor has the option of using precast manholes, as approved by the Construction Manager.

The ends of all pipes installed in inlets shall be cut off flush with the inside face of the inlet wall.

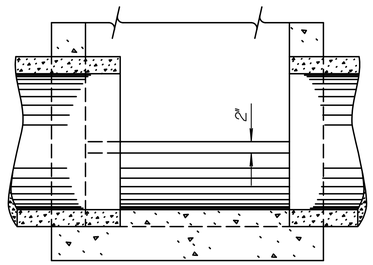

SECTION A-A (Example I)

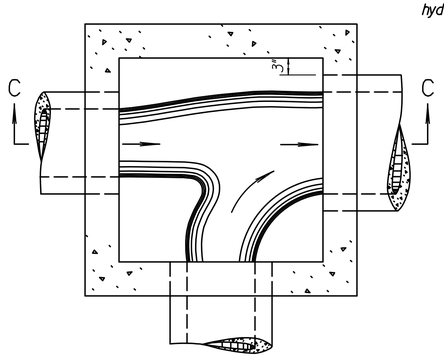

PLAN - FLOOR (Example IV)

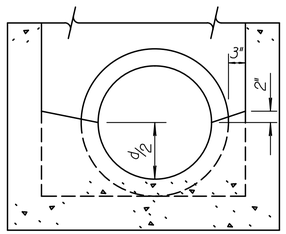

SECTION B-B (Example I)

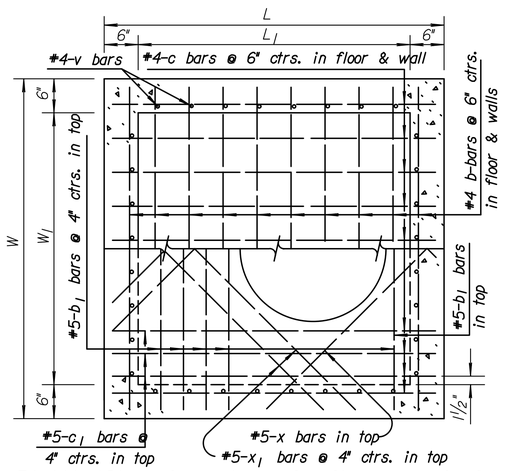

PLAN (Showing top & floor reinf.)

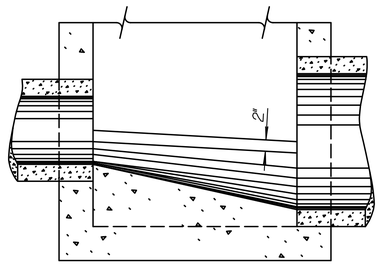

SECTION C-C (Example IV)

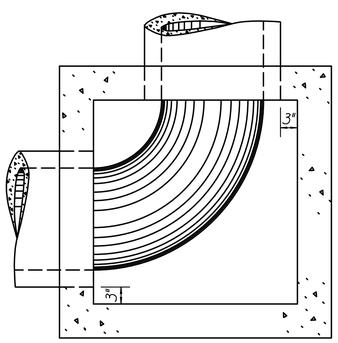

PLAN - FLOOR (Example II)

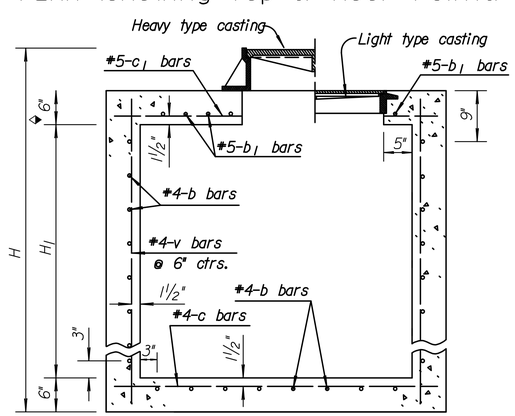

◆Where dimension "L" or "W" is greater than 6'-0" use 8" slab thickness.

SECTION (Exclusive of floor shaping)

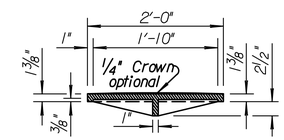

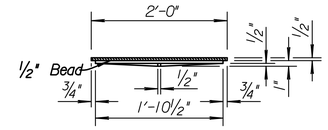

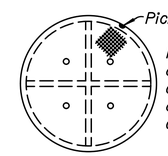

NOTE: All manhole castings are cast iron. Weight of castings includes no allowance for fillets and overruns.

MANHOLE COVER TYPE A & B

(Weight=134 lbs.; without 1/4" Crown= 125 lbs.)

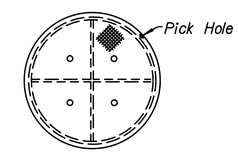

MANHOLE COVER TYPE C

(Weight= 64 lbs.)

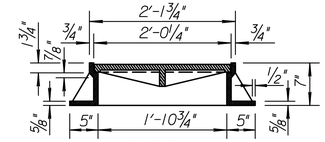

TYPE A

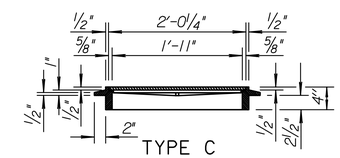

TYPE C

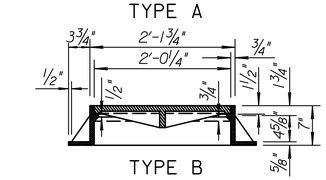

TYPE B

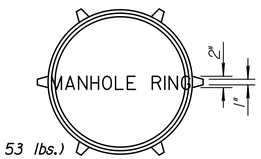

(Weight= 53 lbs.)

*LIGHT TYPE

MANHOLE COVER & RING

*Rings with four equally spaced lugs will be permitted.

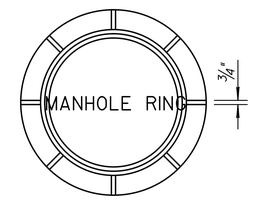

(Type A Ring= 192 lbs., Type B Ring= 198 lbs.)

HEAVY TYPE

MANHOLE COVER AND RING

Note: Either Type A or Type B may be used.

NOTE: DRAWINGS AND SPECIFICATIONS ARE ORGANIZED FOR CONVENIENCE OF REFERENCE ONLY. THIS ORGANIZATION IS NOT INTENDED TO ESTABLISH THE SCOPE OF WORK OF ANY TRADE. THE WORK OF ANY GIVEN TRADE, SUPPLIER OR SUBCONTRACTOR MAY BE REPRESENTED IN DRAWINGS OR SPECIFICATION SECTIONS THAT CROSS OVER BETWEEN DESIGN DISCIPLINES AND MAY BE SHOWN ON OTHER DRAWINGS OR IN OTHER SPECIFICATION SECTIONS WITHIN THE CONTRACT DOCUMENTS. ESTABLISHING THE SCOPE OF ANY TRADE OR SUPPLIER IS THE RESPONSIBILITY OF THE CONTRACTOR. NEITHER THE OWNER NOR ARCHITECT WILL ESTABLISH THE LIMITS OR JURISDICTION OF ANY SUBCONTRACTOR.

GLMV Architecture
9229 Ward Parkway, Ste. 210
Kansas City, MO 64114
Tel: (816) 444-4200
www.glmv.com

PEC
PROFESSIONAL ENGINEERING CONSULTANTS, P.A.
104 SOUTH PINE PITTSBURG, KS 66762
620-235-0195 www.pec1.com
STATE CERT. OF AUTHORITY NO. 000465
PEC PROJECT # 14E14-000

STATE OF MISSOURI
BRIAN COOMES
02/12/2016
NUMBER PE-2015029306
PROFESSIONAL ENGINEER

CONSTRUCTION DOCUMENTS

© 2016 GLMV Architecture, Inc.
All work herein is the exclusive property of GLMV Architecture, Inc. and is not to be copied or used in any way without the express written consent of GLMV Architecture, Inc. All drawings, specification, ideas, designs and arrangements appearing herein constitute the original and unpublished Work of: GLMV Architecture, Inc.

JOPLIN PUBLIC SAFETY TRAINING FACILITY

5102 SWEDE LANE, JOPLIN, MO

MARK	DATE	DESCRIPTION

REINFORCED CONCRETE MANHOLE DETAILS

JOB NO.	13061.000
DATE	02-12-2016
DRAWN	BMC
CHECKED	BDR

C126

DWG. 31 OF 141

CONSTRUCTION DOCUMENTS

Saved: 01-25-2016, 3:07:54 PM by: BMC
Plot Scale: 1:1 02-12-2016 10:23:58 AM by: BRIAN COOMES
U:\Pittsburg\2014\14E14\000\Main\Drawings\Plan Set\14E14-000_C-126_Reinf Concr MH